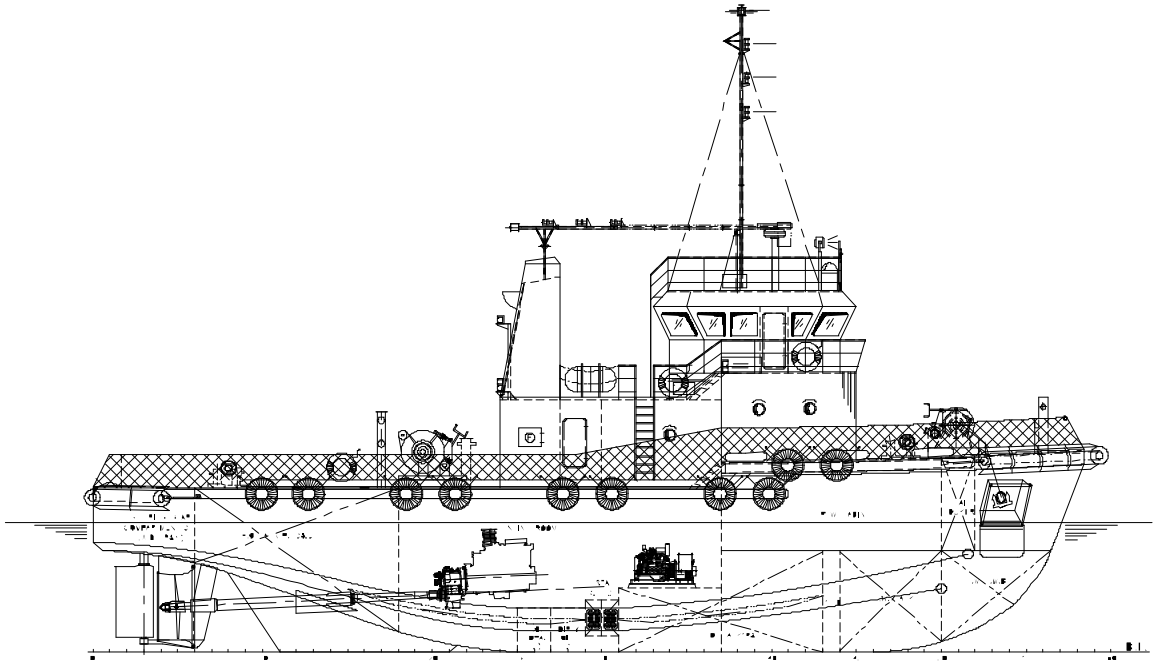

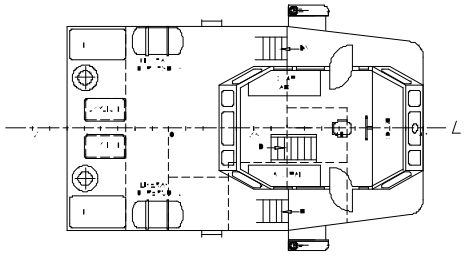

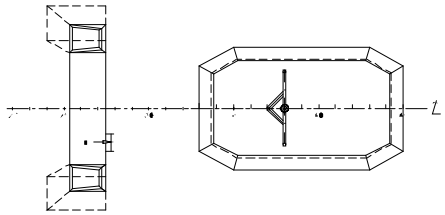

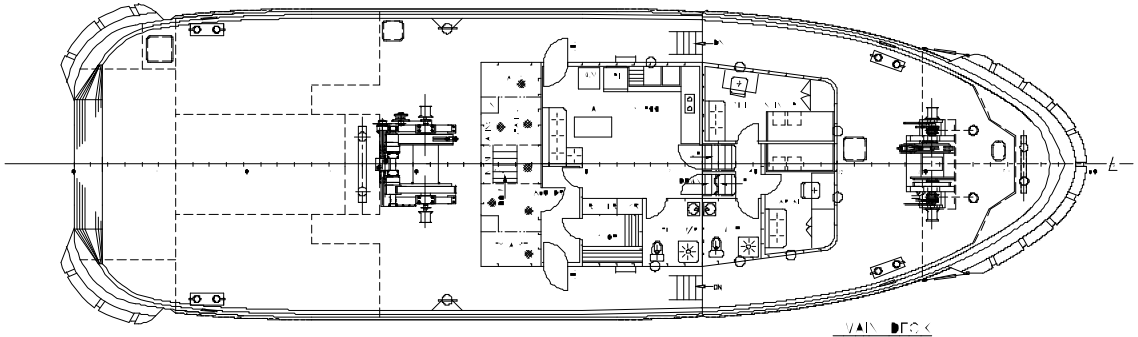

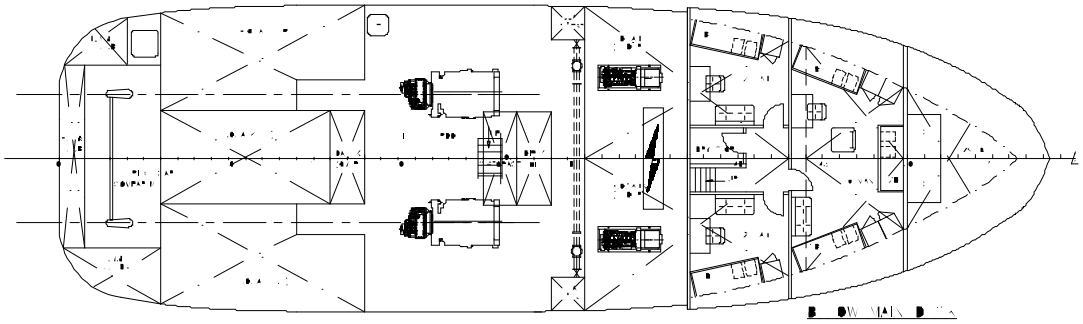

DATE	MODIFICATION	REV	BY

OWNER	
BUILDER	PLEASANT ENGINEERING SDN.BHD
CLASS	B.V.
HULL NO	01/08 ,02/08 ,03/08 ,05/08 ,11/08

SHIP :

29m TWIN SCREW TUG.

TITLE :

GENERAL ARRANGEMENT

PLEASANT ENGINEERING SDN.BHD.
(641740-K)

DRAWN	CHECKED	APPROVED	SCALE	DRAWING NO.	REV
			1:75	PE290BT-G1	0